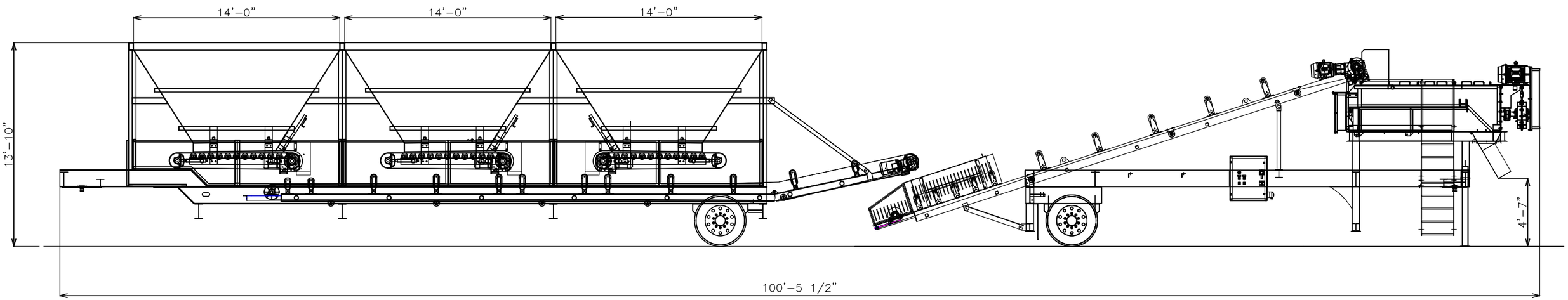

NO.	REVISIONS	BY	DATE
3			
2			
1			

DRN. MB DATE 02/11/26
TOLERANCE: ± 1"
SCALE NTS

ROCK SYSTEMS, INC.

CUSTOMER

TITLE MODEL 108-3P 3 BIN BLENDING HOPPER & MODEL 802-RSI PUGMILL PLANT

REF.#

MODEL#

DWG.#